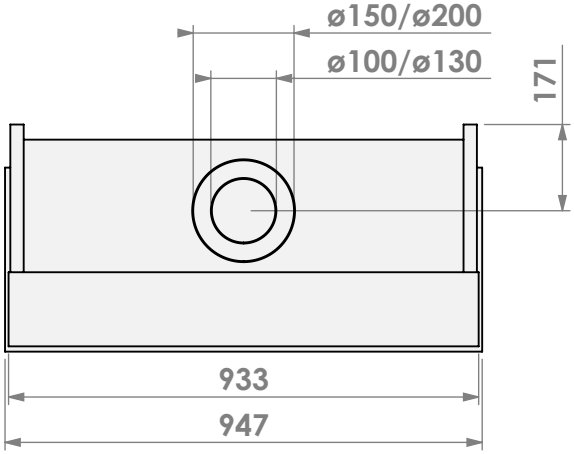

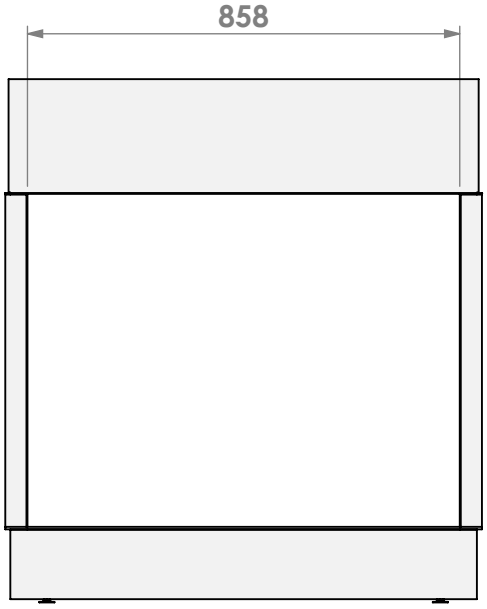

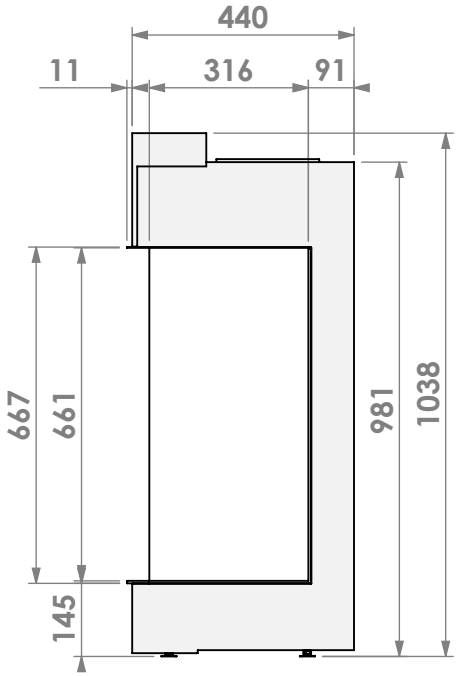

Barbas Bellfires B.V.
Hallenstraat 17
5531 AB Bladel
The Netherlands
www.barbasbellfires.com

Name:
View Bell Derby 3 hidden door

Modifications reserved

Projection: American

Scale: 1:15

Unit: mm

Version: 0

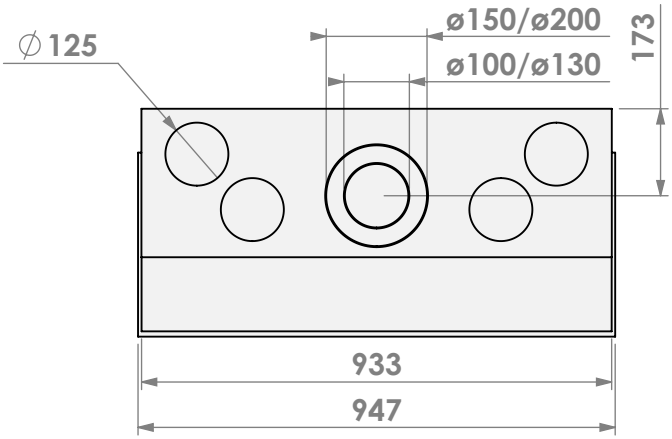

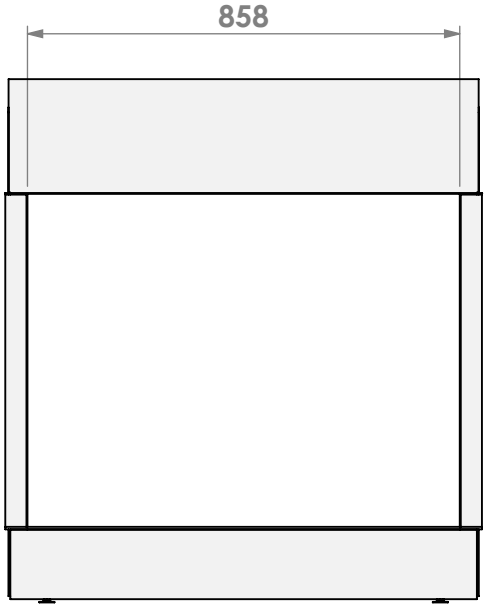

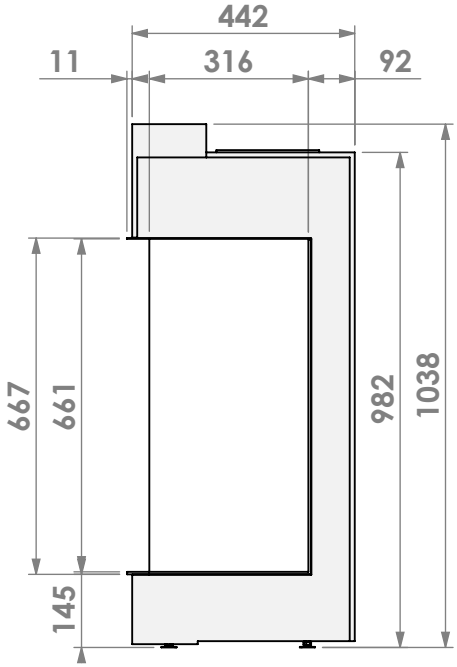

bellfires.
Barbas Bellfires B.V.
Hallenstraat 17
5531 AB Bladel
The Netherlands
www.barbasbellfires.com

Name:
View Bell Derby 3 hidden door convection casing

Modifications reserved

Projection: American

Scale: 1:15

Unit: mm

Version: 0

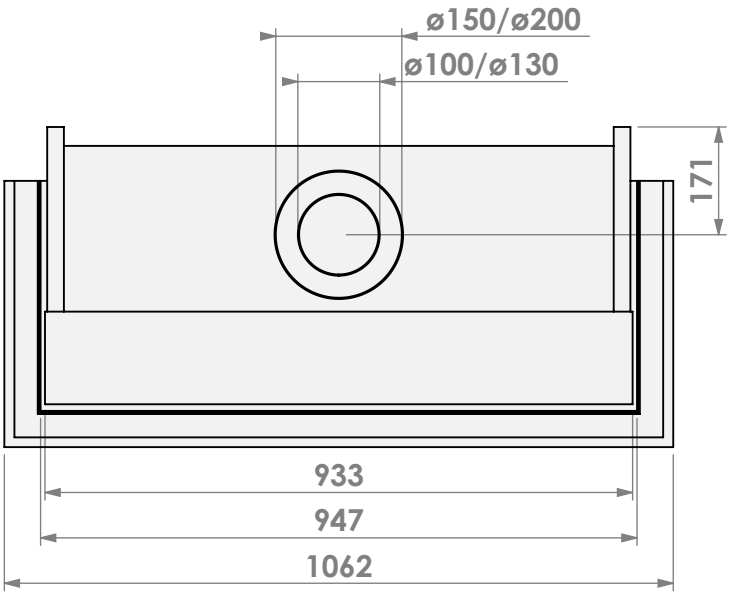

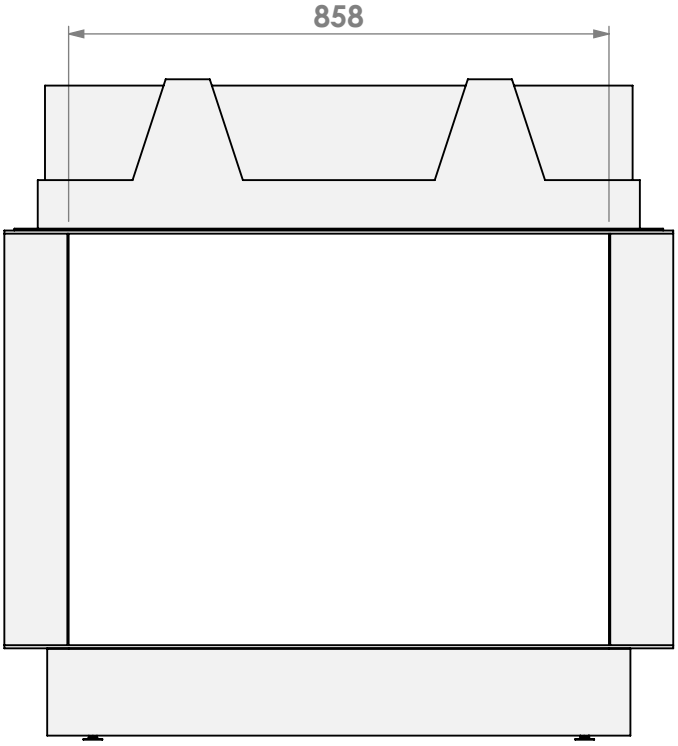

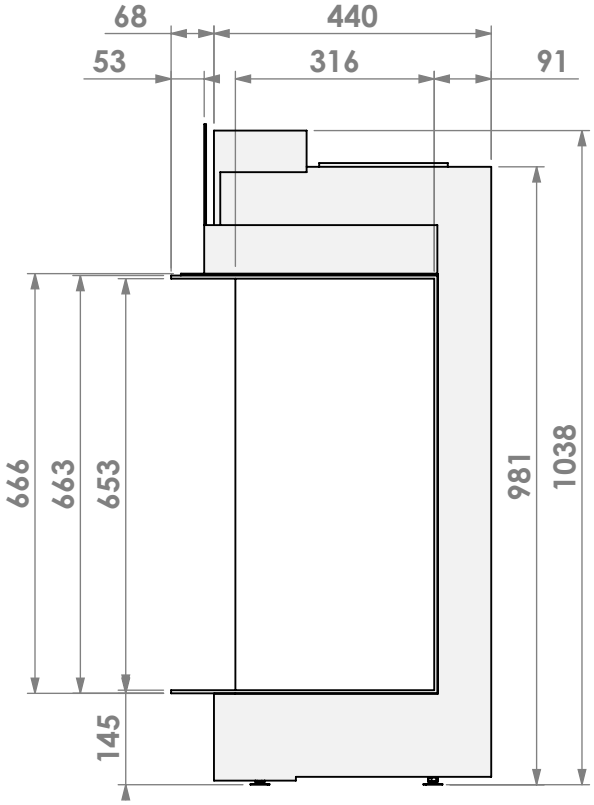

Barbas Bellfires B.V.
Hallenstraat 17
5531 AB Bladel
The Netherlands
www.barbasbellfires.com

Name:
View Bell Derby 3 hidden door+ 10 cm

Modifications reserved

Projection: American

Scale: 1:15

Unit: mm

Version: 0